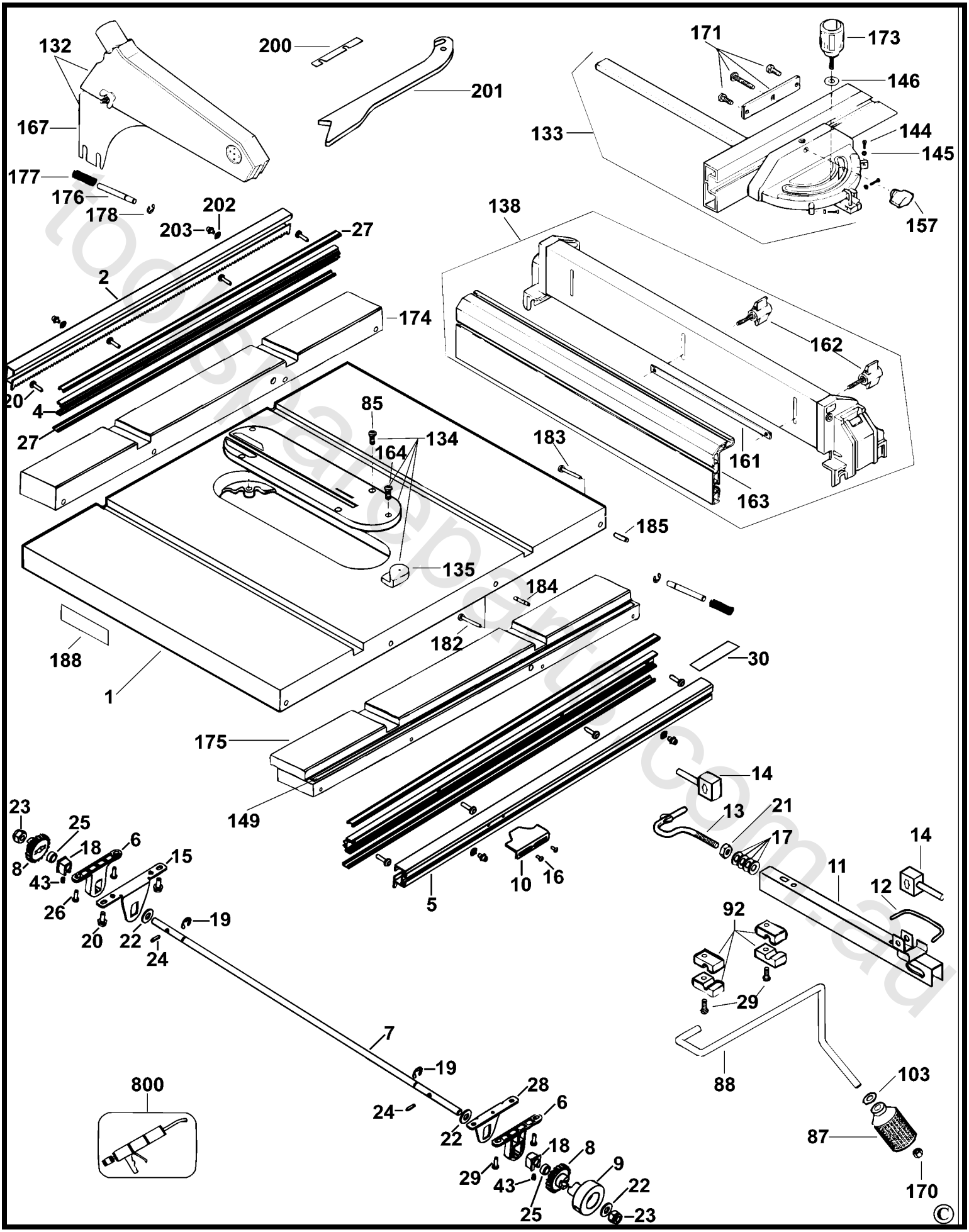DW744XP Table TABLE SAW 3